Southern African Pyrometallurgy 2006, Edited by R.T. Jones,
South African Institute of Mining and Metallurgy, Johannesburg, 5-8 March 2006

Xstrata Alloys in Profile

O. Naiker and T. Riley
Xstrata Alloys, South Africa

Keywords: Pyrometallurgy, furnace, Xstrata, ferrochromium, Premus Technology

Abstract – The presentation will give a basic overview of Xstrata Alloys. Included will be a brief history of the Alloys division as well as of each plant within the division. The Xstrata chrome plants utilise a wide variety of production processes, including Xstrata's Premus process, the Outokumpu process, and the conventional process. Xstrata's Lion Project is underway, with commissioning expected in the third quarter of 2006. The new smelter will utilize Xstrata's patented Premus process, and the competitiveness of the Premus process is discussed.

XSTRATA'S RUSTENBURG SMELTER OPERATIONS

Figure 1: Rustenburg Furnace Plant (Left) and Pelletising Plant (Right)

Plant History

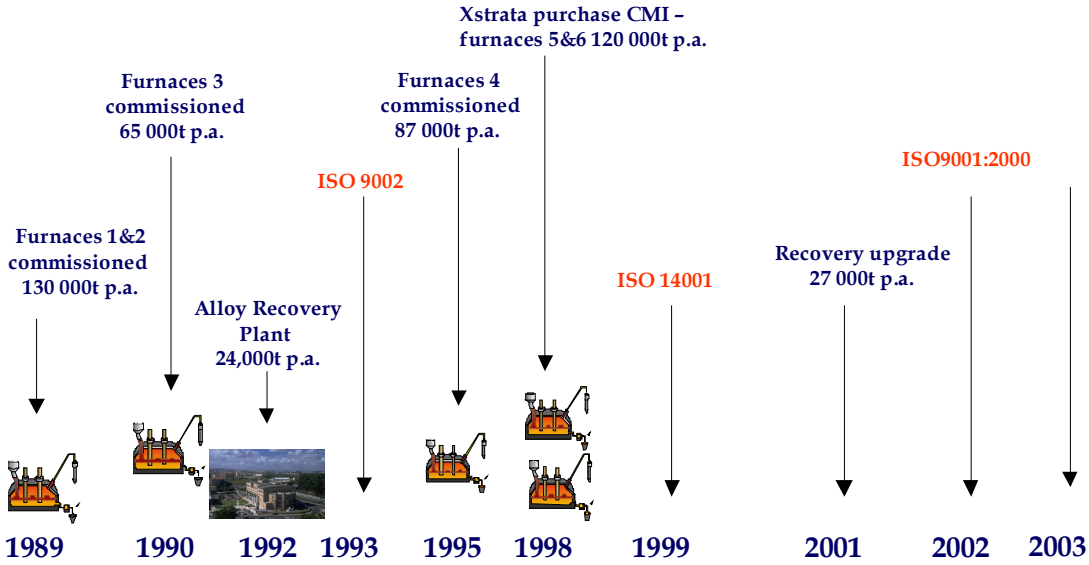

Plant Capacity

430 000 ton of Ferrochrome per Annum

- Normal Grade Product and Alternative Grade Product
- Recovery Product (Typical < 3% slag)

6 Furnaces with 220MVA Installed Capacity

Agglomeration Capacity 900 000 ton p.a.

- Blocks 400 000 ton p.a. and Pellets 500 000 ton p.a.

Recovery Plant: 30 000 ton Ferrochrome p.a.

Product Specification (Ferrochrome): 48-52% Cr, 7-8% C, 3-5% Si, 35-37% Fe

XSTRATA'S WONDERKOP SMELTER OPERATIONS

Figure 2: Overview of the Wonderkop Plant

Plant History

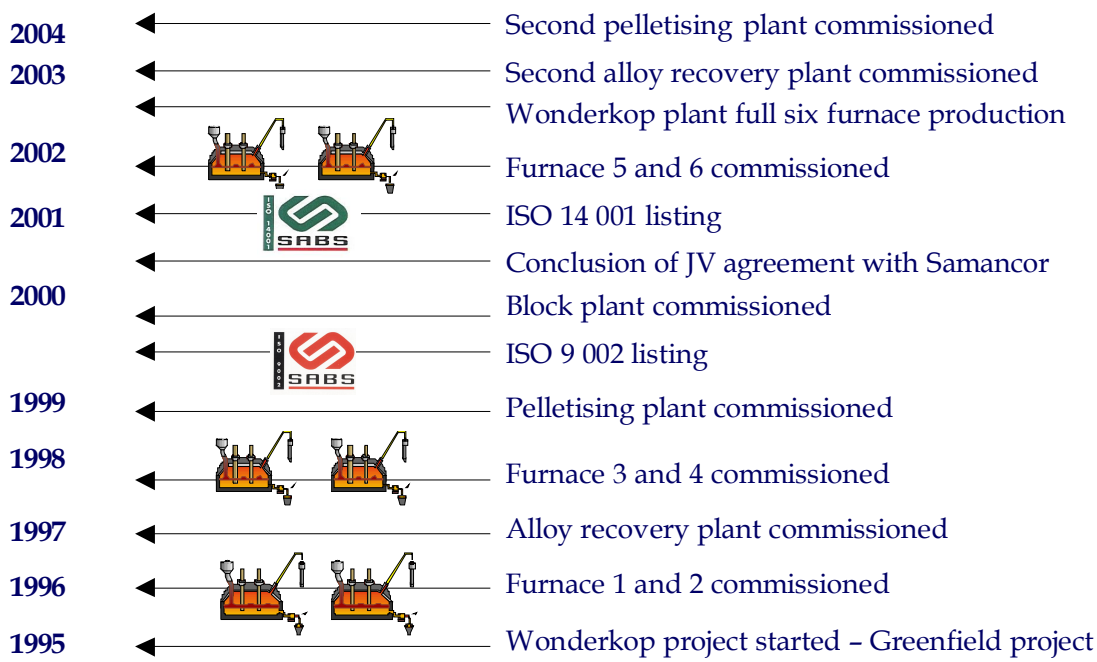

Plant Capacity

460 000 ton of Ferrochrome per Annum

- Normal Grade Product and Alternative Grade Product
- Recovery Product (Typical < 3% slag)

6 Furnaces with 270MVA Installed Capacity

- 35% to 40% low temperature sintered pellets

Agglomeration Capacity 780 000 ton p.a.

- Blocks 240 000 ton p.a. Pellets 540 000 ton p.a.
- In-house developed low temperature (700 deg. C) process
- Fluidized bed driven baking grate

Recovery Plant 30 000 ton Ferrochrome p.a.

- Magnetic upgrade and gravity separation

Product Specification (Ferrochrome): 48-52% Cr, 7-8% C, 3-5% Si, 35-37% Fe

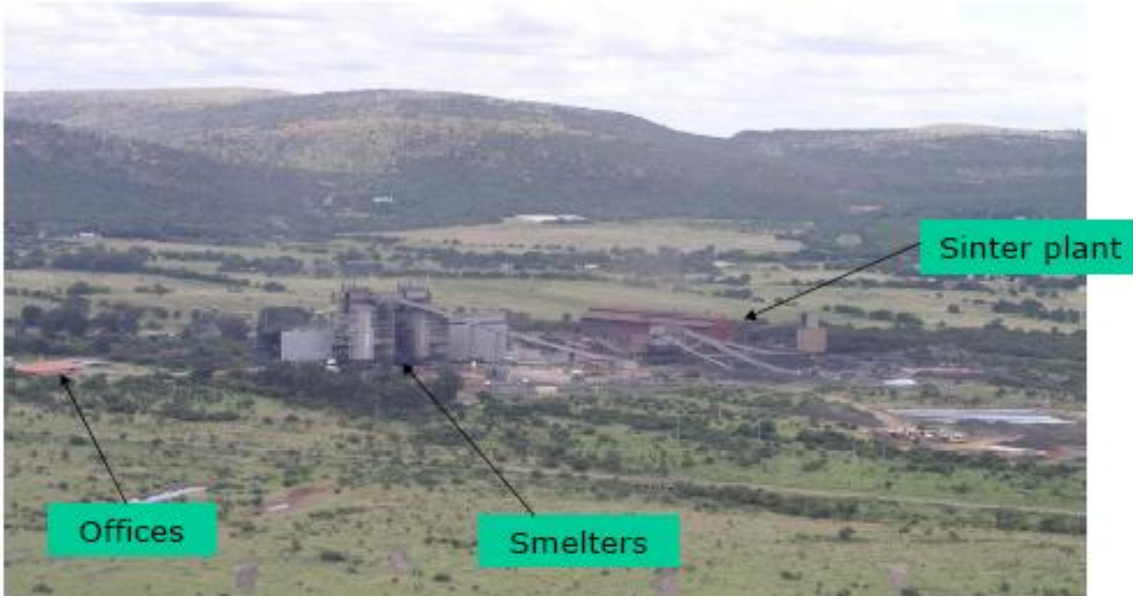

XSTRATA'S BOSHOEK SMELTER OPERATIONS

Figure 3: Overview of the Boshoek Smelter Operations

Plant Capacity

240 000 ton of Ferrochrome per Annum

- Normal Grade Product (>50%Cr)
- Alternative Grade Product (<50%Cr)
- Recovery Product (Typical < 3% slag)

2 Furnaces with 110 MVA Installed Furnace Capacity

- Fully integrated Outukumpu pelletising, pre-heating and smelting plant.

Agglomeration Capacity 540 000 ton p.a.

- Pellets 540 000 ton p.a.
- Outukumpu Technology
- High temperature (1200 deg. C) sintering process.
- High flexibility in fine ore input selection

Recovery Plant 8 000 ton p.a. ferrochrome

Product Specification

- 48-52% Cr, 6-8% C, 3-5% Si, 35-37% Fe, <0.030% P, <0.05% S

XSTRATA'S LYDENBURG SMELTER OPERATIONS

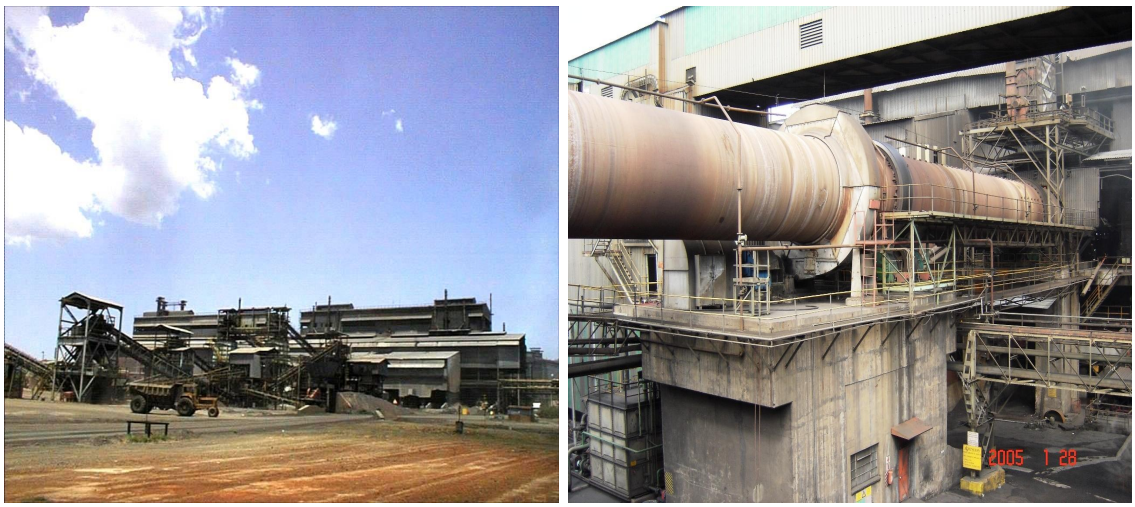

Figure 4: Overview of the Lydenburg Plant

Plant History

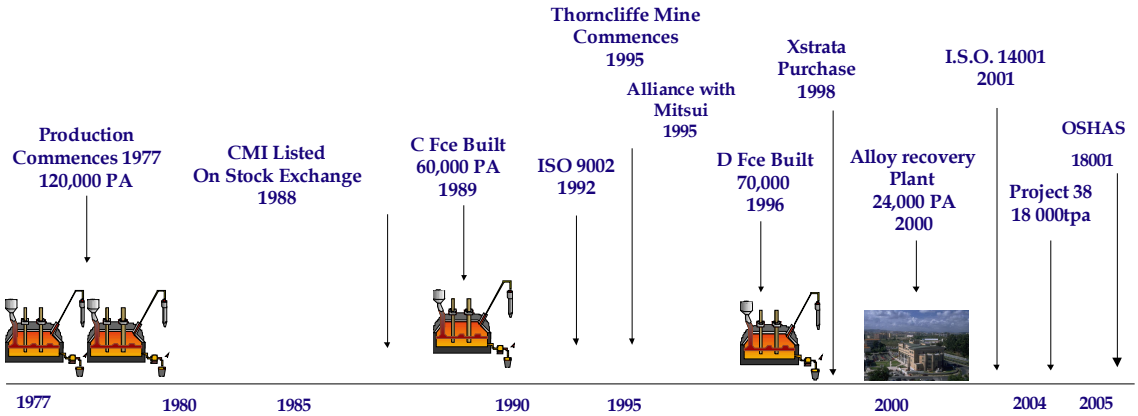

Plant Capacity

402 000 ton of Ferrochrome per Annum.

- Normal Grade Product
- Recovery Product (Typical < 3% slag)

4 Furnaces with 171 MVA Installed Capacity

- Pre-reduced pellets

Agglomeration Capacity 550 000 ton p.a.

- Pellets 550 000 ton p.a.
- Premus pre-reduction process

Recovery Plant: 24 000 tons Ferrochrome p.a.

Product Specification: +50% Cr, 6 - 8% C, 1,5-4% Si, <0.020% P, <0.05% S

- Approximately 65% of Product is Granulated (40mm down)
- Approximately 35% is Crushed to Customer Specification (80*10mm)

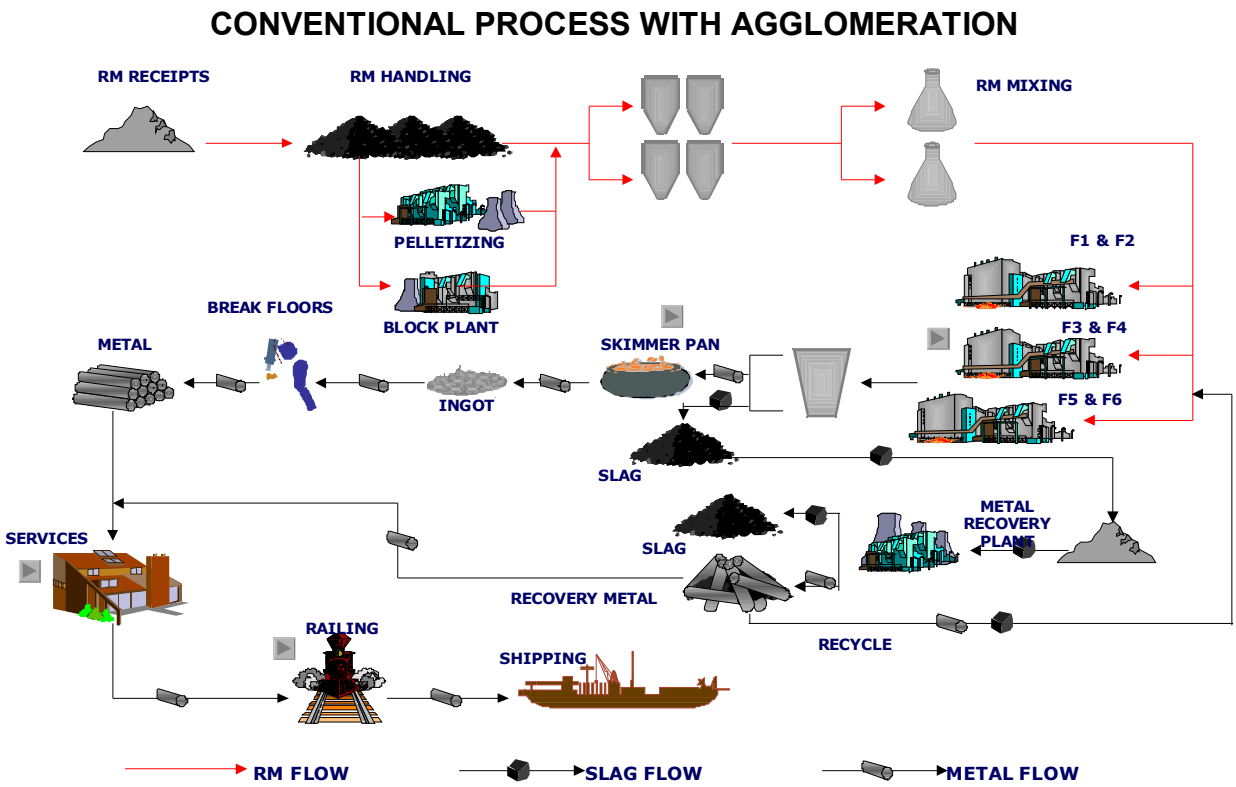

Figure 5: Conventional Route Production Flowsheet

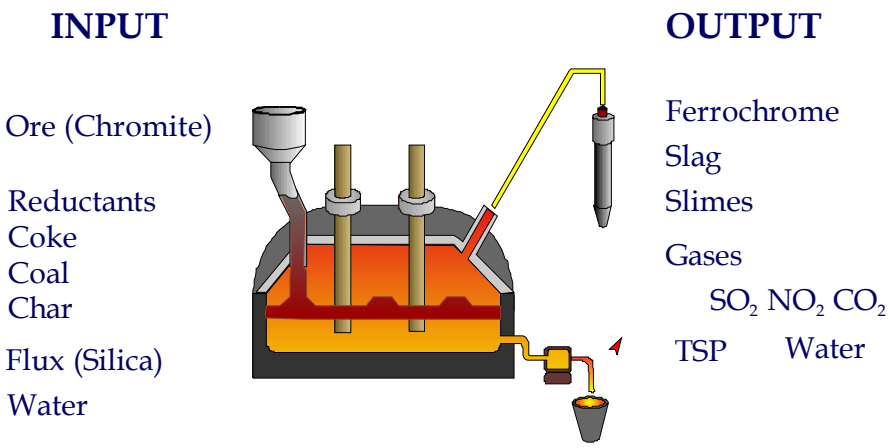

Figure 6: Furnace Process Inputs and Outputs

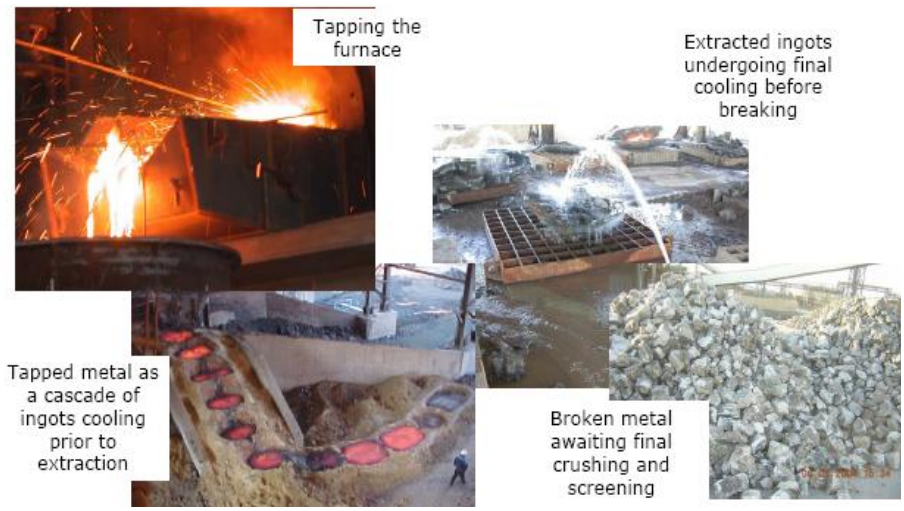

Figure 7: Post Taphole Operations

THE PREMUS PROCESS

It is the most sophisticated and competitive process used today in the production of ferrochrome Designed to reduce electrical energy consumption and provide high recoveries of metallic oxides, utilizing low cost reductants and energy sources such as anthracite and 0_2. As electrical energy and chrome ore cost increase (50% of current variable cost structures) the plant's competitiveness improves.

Premus Process Versus Conventional Process

Characteristic	Premus Process	Conventional Process
Electrical Energy:	2400 kWh/ton	3900 kWh/ton
Chrome Ore:	90% Recovery	70% Recovery
Other:	100% Fine Ore 60% Fine Reductant Waste Gas Heat Utilized High Capital Cost Low Si Product (<3%)	Lump/Fine Mix All Lump Reductant Off Gas Burnt Low Capital Cost High Si Product (>4%)

Premus Process Flowsheet

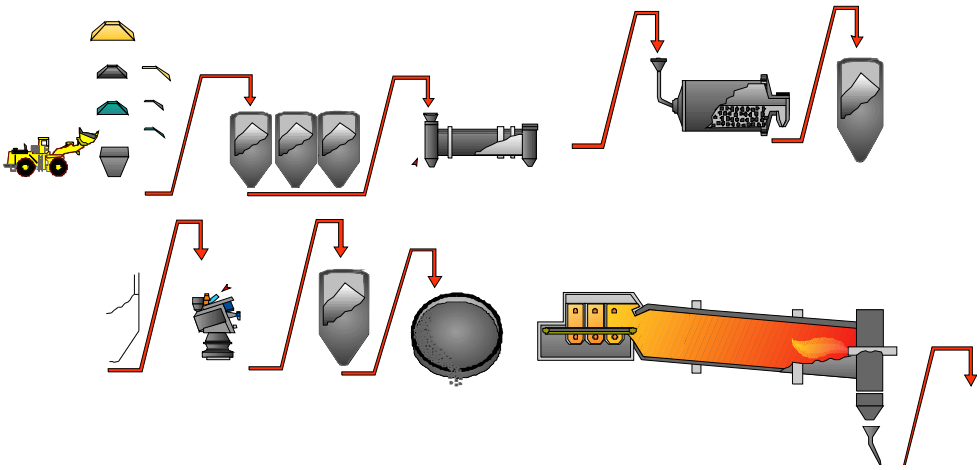

Figure 8: Pelletising and Pre-reduction

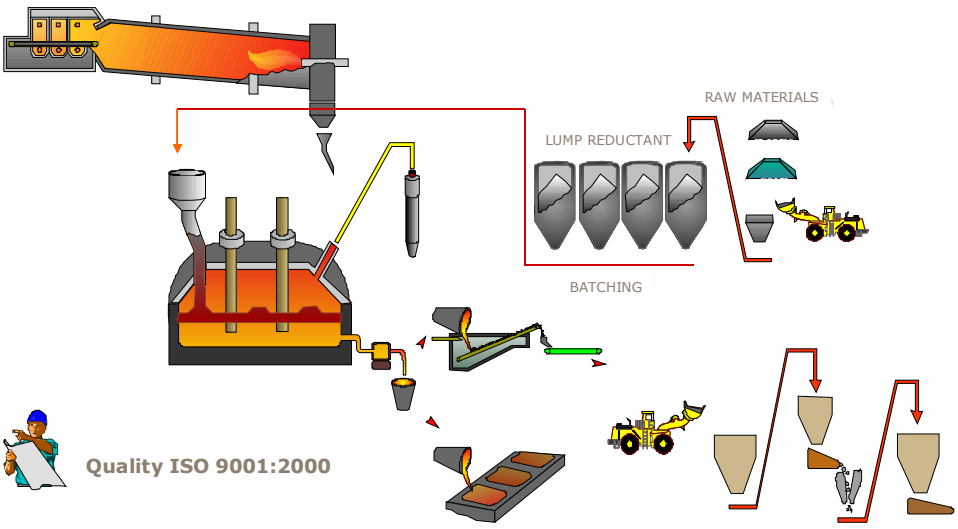

Figure 9: Premus Smelting Process

THE OUTOKUMPU PROCESS

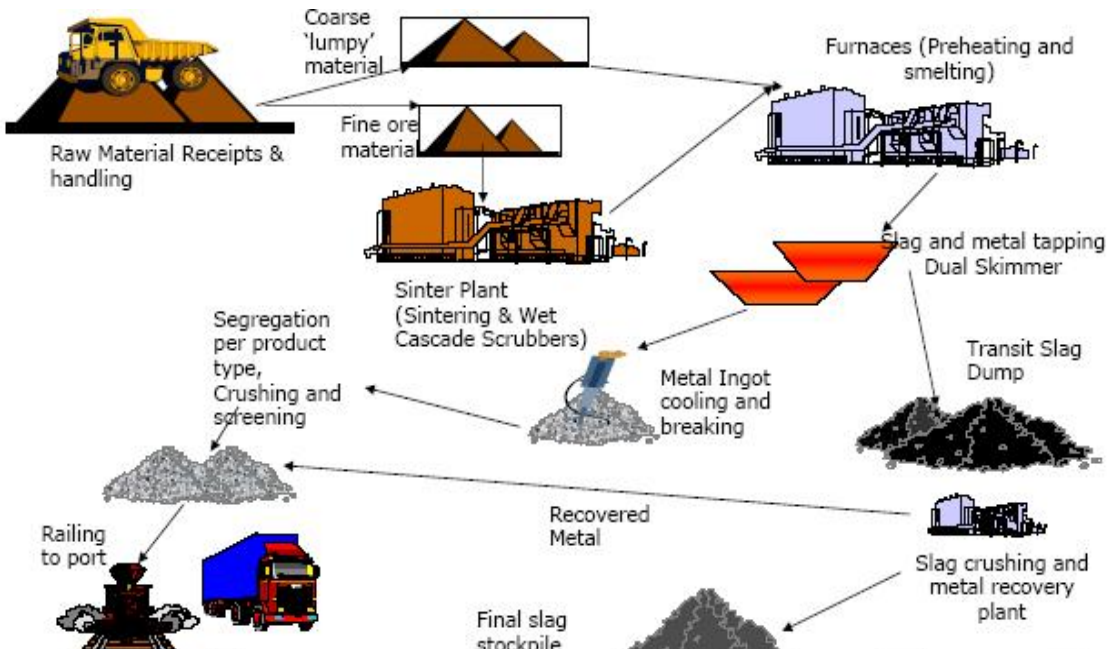

Figure 10: Outokumpu Process Flowsheet

Process Characteristics and Benefits in the Boshoek Operation

- Designed to accept a large proportion of material as fine ore feed (65 – 85%)
- Agglomerated ore feeds allow increased chromium recovery efficiencies and flexibility in ore sourcing strategies.
- Closed furnace configuration reduces pollution and enables CO product utilization.
- Use is made of the CO rich furnace off-gas to pre-heat the feed- reducing electrical energy consumption, reducing the overall environmental footprint of the process
- The large capacity of the Boshoek pelletising plant offers specific flexibility in the process

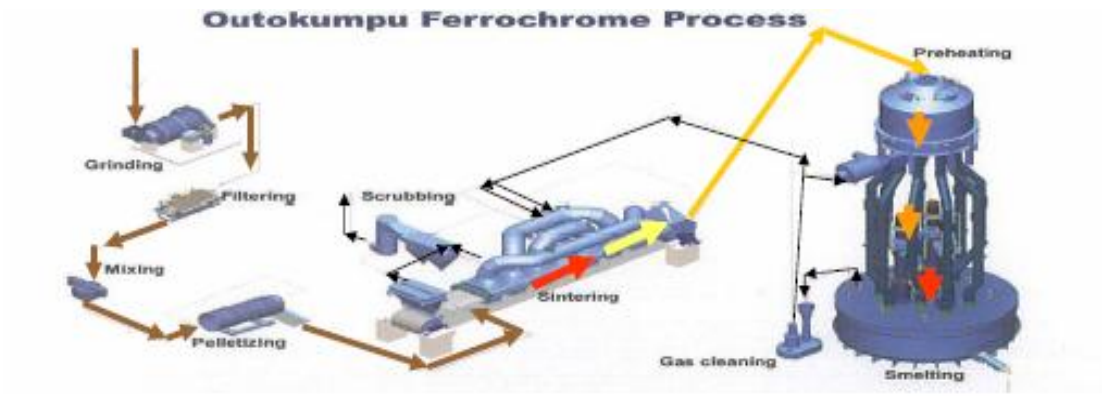

XSTRATA'S VANADIUM BUSINESS

What is Vanadium?

- Silver grey metal
- Melting Point = 1710 deg. C
- Atomic Number = 23
- Atomic Weight 50.942

Main Sources of Vanadium

Vanadium is often a co-product or by-product.

Most production comes from vanadium-containing magnetite ores

- Pig iron may be a co-product; vanadium is then recovered as a slag for further processing
- There is also some co-product production from iron sands

Other sources include uranium ore, phosphorus ore, crude oil, power plant ash, spent catalysts, other residues

Vanadium materials are converted into ammonium vanadates and subsequently into vanadium oxides, most commonly pentoxide (V_2O_5)

Vanadium oxides are further processed into commercial products

- Slags can be processed directly into 40% ferrovanadium
- 80% ferrovanadium is a more common grade, produced from V_2O_5