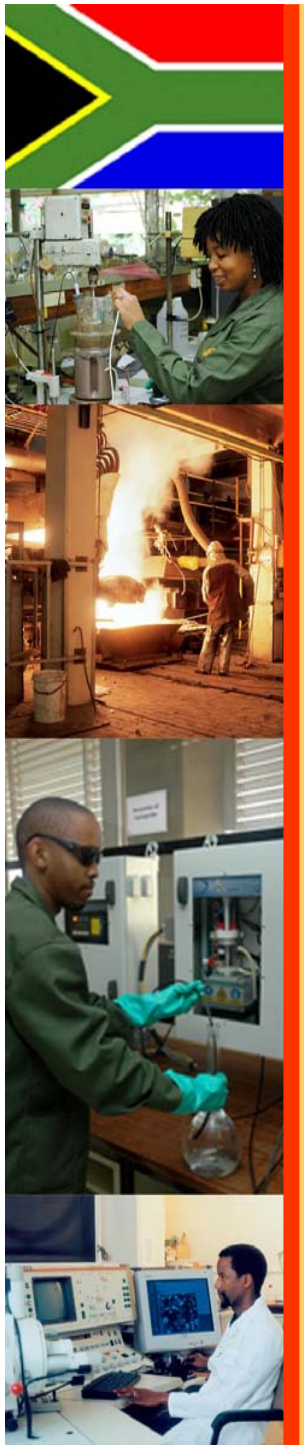

Simulation of ferro-alloy smelting in DC arc furnaces using Pyrosim and FactSage

Rodney Jones & Markus Erwee

16 February 2016

TMS2016 FEBRUARY 14-18 DOWNTOWN NASHVILLE, TENNESSEE MUSIC CITY CENTER

MINTEK

Chromite Smelting

- Production of ferro-alloys is important for steelmaking, and for the South African economy
- 2 GW of electrical power is used for ferro-alloy smelting in South Africa
- DC arc furnaces have been used industrially for chromite smelting since 1984. The first furnace was 12 MW.

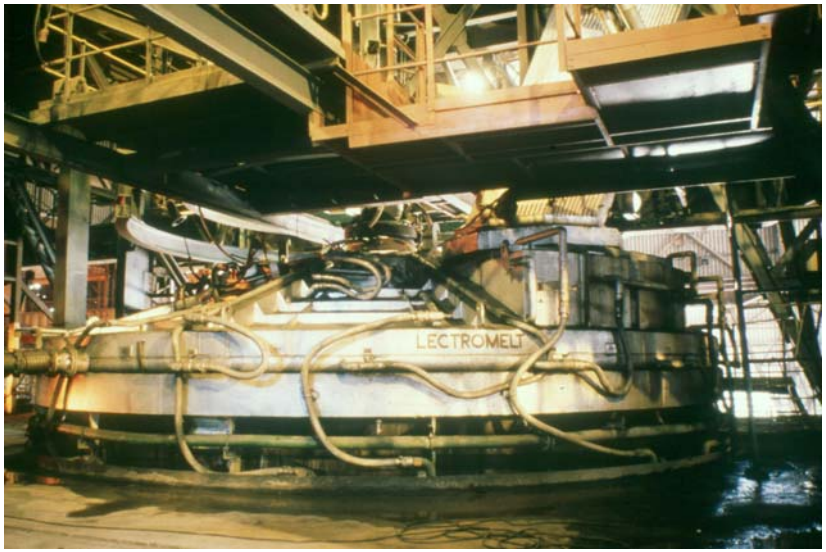

MINTEK

Features of DC arc furnaces

- Operates with open arc, open bath
- **Can accept fine feed materials** (< 10 mm)
- Does not require coke
- Can achieve high temperatures (> 1500°C)
- Lower electrode consumption
- No arc repulsion (and resulting hot spots)
- DC furnaces carry higher currents per electrode (no ‘skin effect’)
- Energy supplied by open plasma arc, so less sensitive to electrical properties of slag
- Power supplied to furnace is independent of slag composition, so slag can be changed to one that allows higher Cr recovery

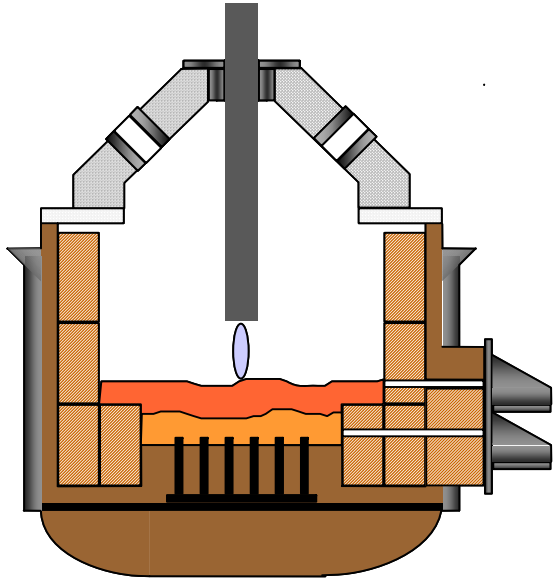

MINTEK

DC arc furnaces for chromite smelting in South Africa

- South Africa currently has the following DC arc furnaces for chromite smelting:
  - 2 x 60 MW
  - 1 x 30 MW
  - 1 x 10 MW

MINTEK

DC arc furnaces for chromite smelting in Kazakhstan

- Kazakhstan currently has the following DC arc furnaces for chromite smelting:
  - 4 x 72 MW

MINTEK

Chromite Smelting – highly simplified

$$FeO.Cr_2O_3 + 4C \rightarrow Fe + 2Cr + 4CO$$

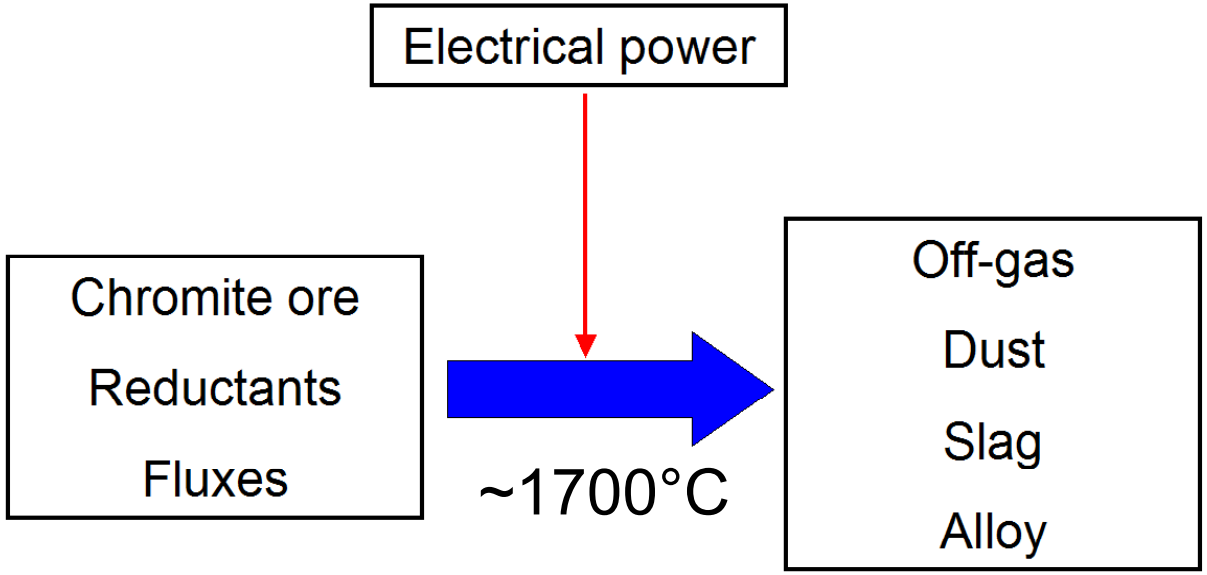

Chromite spinel: $(Fe,Mg)O \cdot (Cr,Al)_2O_3$

MINTEK

Chromite ore compositions (mass %)

Origin	Cr_2O_3	FeO	MgO	Al_2O_3	SiO_2	Cr/Fe
Kazakhstan	51.2	11.9	19.8	6.5	6.9	3.8
Zimbabwe	50.8	13.3	17.9	12.7	3.9	3.4
India A	53.5	16.9	11.4	11.4	1.3	2.8
India B	50.9	17.9	10.9	12.7	1.2	2.5
North America	44.0	18.2	12.8	12.5	5.9	2.1
South Africa LG	46.6	25.0	10.8	15.1	0.6	1.6
South Africa UG2	42.6	27.4	9.3	14.9	1.2	1.4
South Africa MG	42.9	28.5	8.8	15.7	3.0	1.3

MINTEK

Chromite ore compositions (mass %)

Origin	Cr_2O_3	FeO	MgO	Al_2O_3	SiO_2	Cr/Fe
Kazakhstan	51.2	11.9	19.8	6.5	6.9	3.8
Zimbabwe	50.8	13.3	17.9	12.7	3.9	3.4
India A	53.5	16.9	11.4	11.4	1.3	2.8
India B	50.9	17.9	10.9	12.7	1.2	2.5
North America	44.0	18.2	12.8	12.5	5.9	2.1
South Africa LG	46.6	25.0	10.8	15.1	0.6	1.6
South Africa UG2	42.6	27.4	9.3	14.9	1.2	1.4
South Africa MG	42.9	28.5	8.8	15.7	3.0	1.3

MINTEK

Typical slag and alloy compositions

	Al_2O_3	CaO	Cr_2O_3	FeO	MgO	SiO_2
Slag	30-40	2-15	4-6	0.5-2	30-40	bal.

	Cr	Fe	Si	C
HC FeCr	50-52	bal.	0.5-1.5	6-8

MINTEK

Pyrosim computer software

1985: Apple II (1 MHz)

1988: MS-DOS version

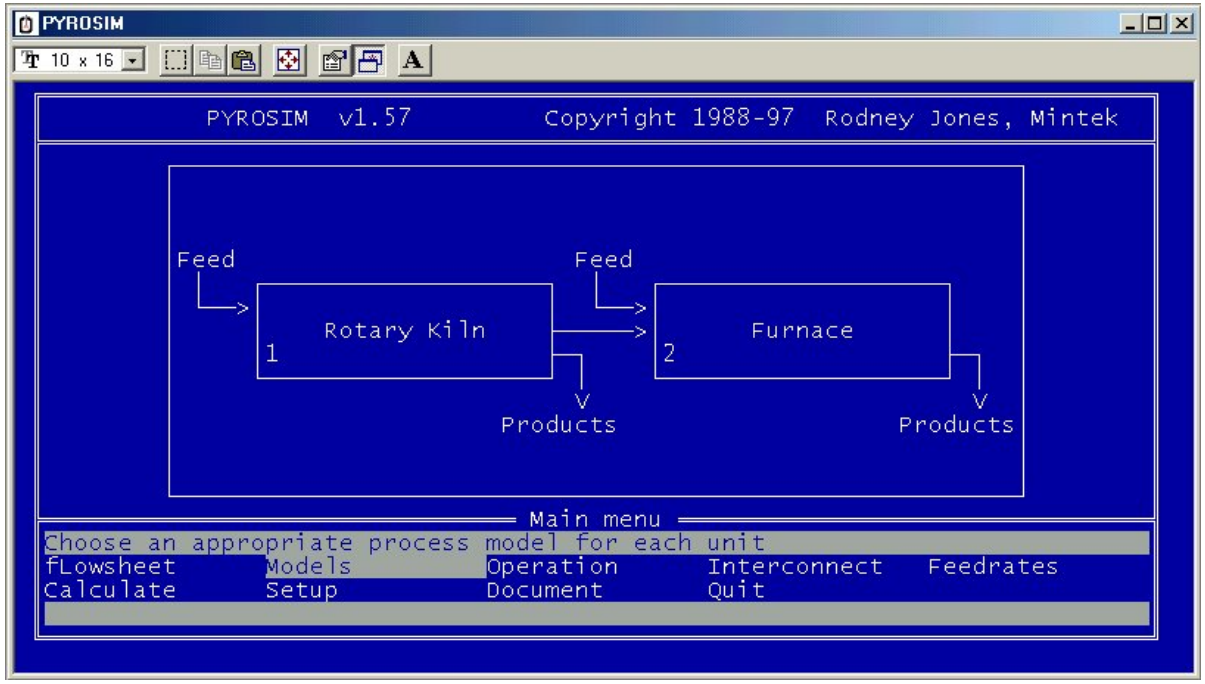

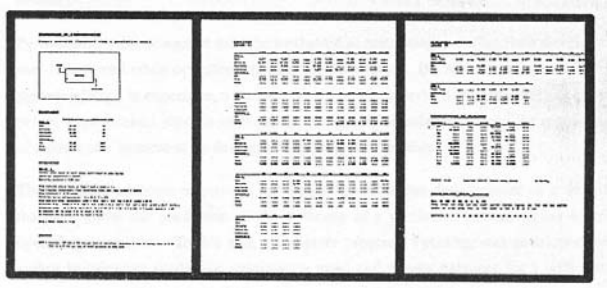

MINTEK

Historical background to Pyrosim

- Originally developed to simulate production of raw stainless steel
- Programming started in 1985, on a 64kb (1 MHz) Apple II computer
- Presented at APCOM 87 in 1987
- First used in industry in 1988
- 1500 fold increase in speed and storage capacity, from Apple II (typical simulation took one hour) to fast Pentium
- Basic - structured & compiled
  - PowerBASIC DLL compiler
- 95 installed sites in 22 countries on 6 continents

MINTEK

Pyrosim

- Equilibrium models - free-energy minimization using Gunnar Eriksson's equations
- Ideal Mixing of Complex Components
- Empirical models
  - Calculate degrees of freedom from number of chemical elements in feed, and number of phases present
  - Specify content (mass %) of any species in any phase
  - Specify ratios between any pair of species in any phase
  - Direct solution of linear equations from an independent set
- Pyrobal: % Cr_2O_3, % FeO, % Si, % C,
  P slag / P metal, S slag / S metal
- Spreadsheet versions of empirical model

MINTEK

F*A*C*T and FactSage

- Facility for the Analysis of Chemical Thermodynamics was established in the late 1970s
- Mid 1980s – Remote access of McGill University computer system via Saponet satellite link
- Limited number of elements in equilibrium calculation
- 1990s – Personal computers
- Main strengths were assessed thermodynamic data, multi-component non-ideal solution models, and leading algorithm for free-energy minimization (Solgasmix)

MINTEK

Plant simulation methodology

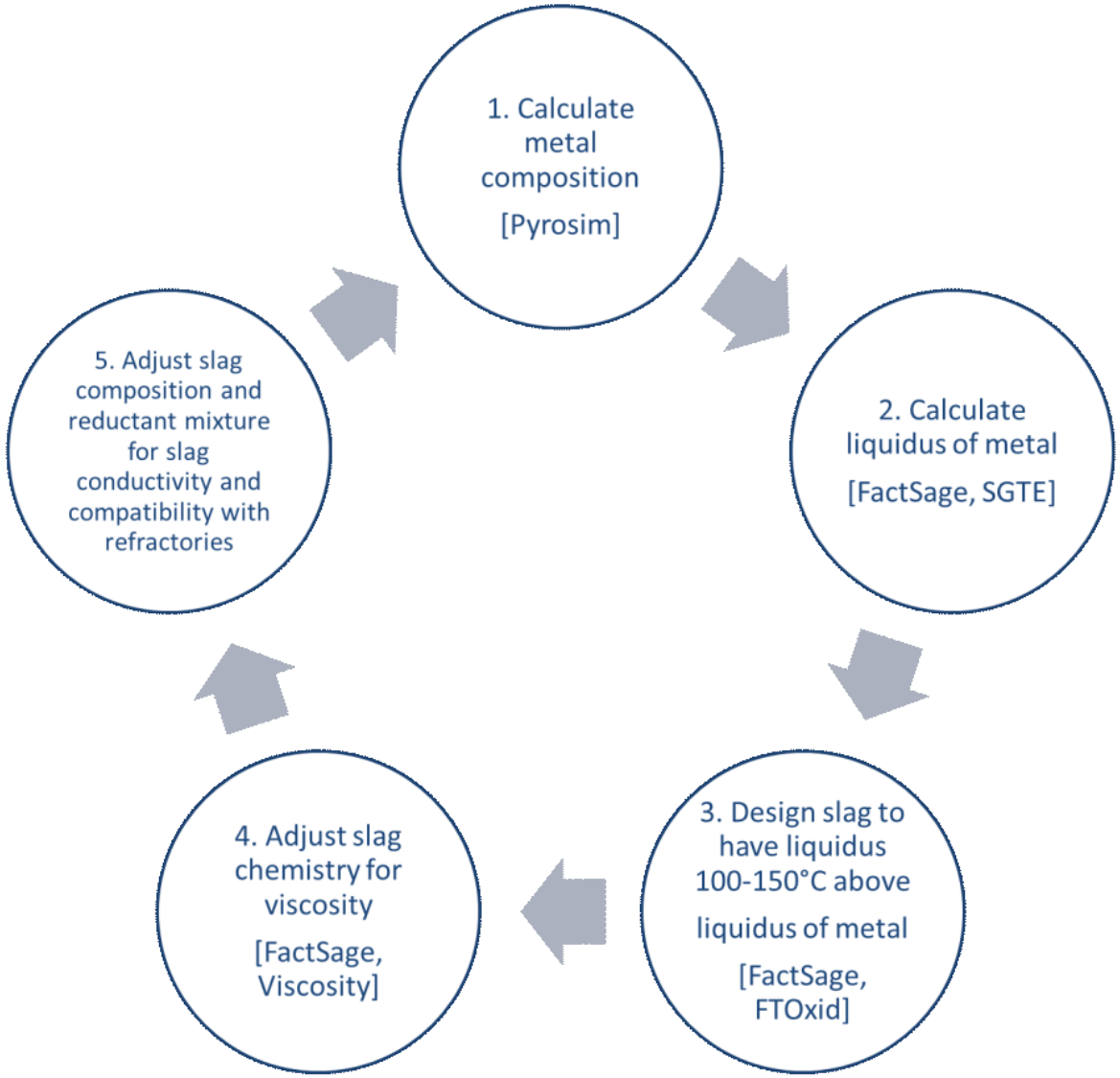

MINTEK

Metal liquidus temperature

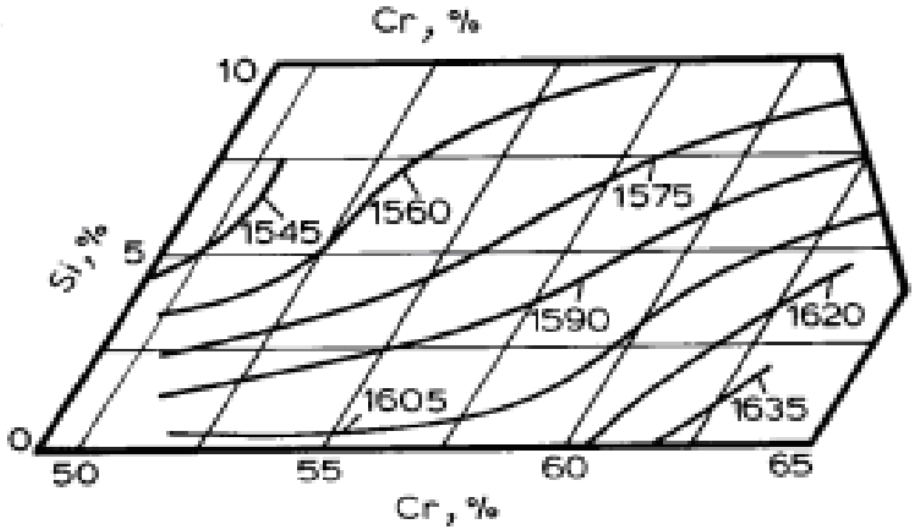

Liquidus isotherms in °C at 8% C for a Fe-Cr-Si-C alloy

	Cr	Fe	C	Si	Liquidus (°C)
HC FeCr from SA operation	50.0	40.5	8.0	1.5	1528 (SGTE)
HC FeCr from Kazakhstan operation	71.0	20.0	8.0	1.0	1644 (SGTE)

Calculations using FactSage 7.0

Slag liquidus temperature

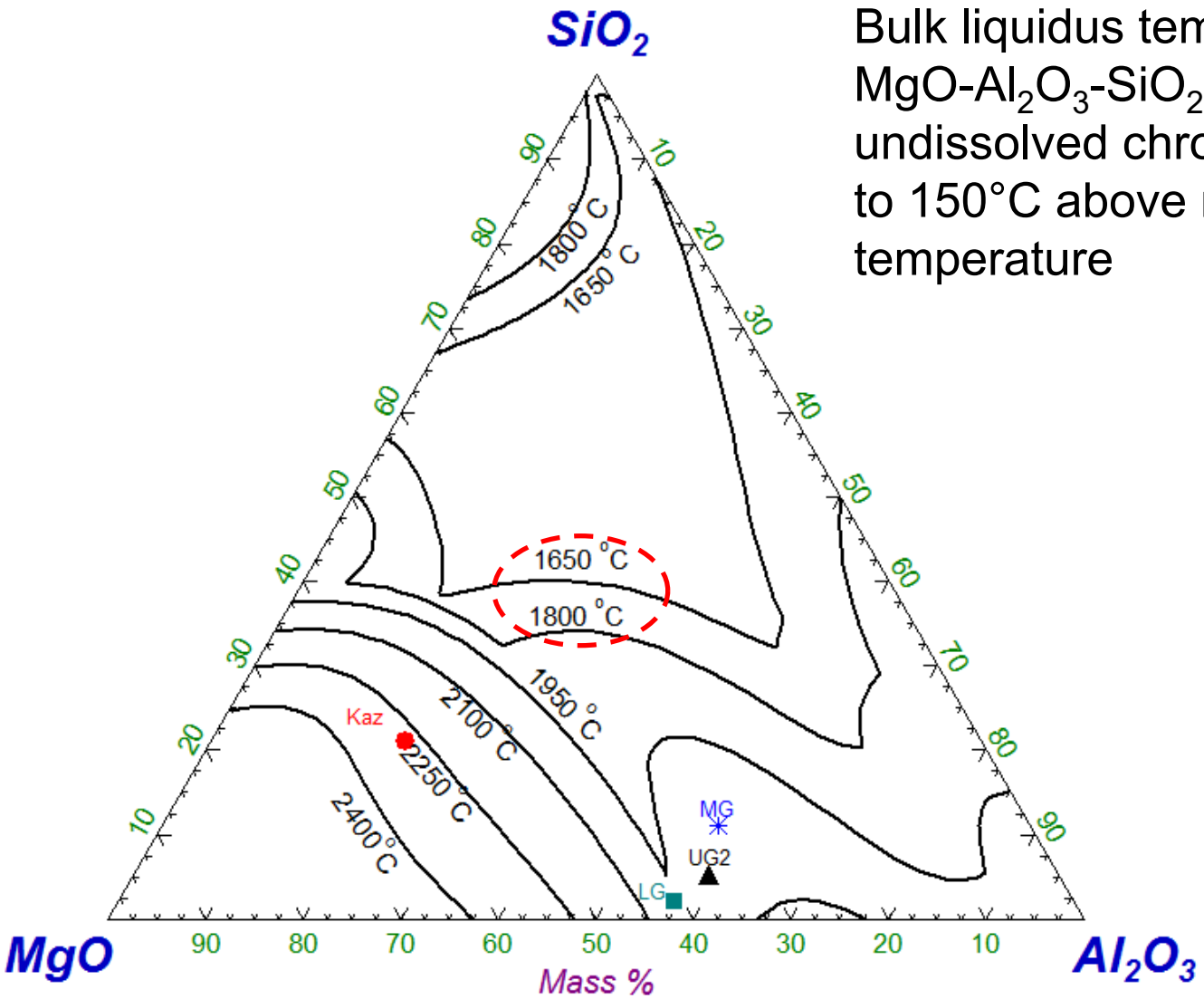

Bulk liquidus temperature of MgO-Al_2O_3-SiO_2-CaO, ignoring undissolved chromite spinel, 100 to 150°C above metal liquidus temperature

FactSage 7.0, FTOxid database

Slag liquidus temperature (Silica as flux)

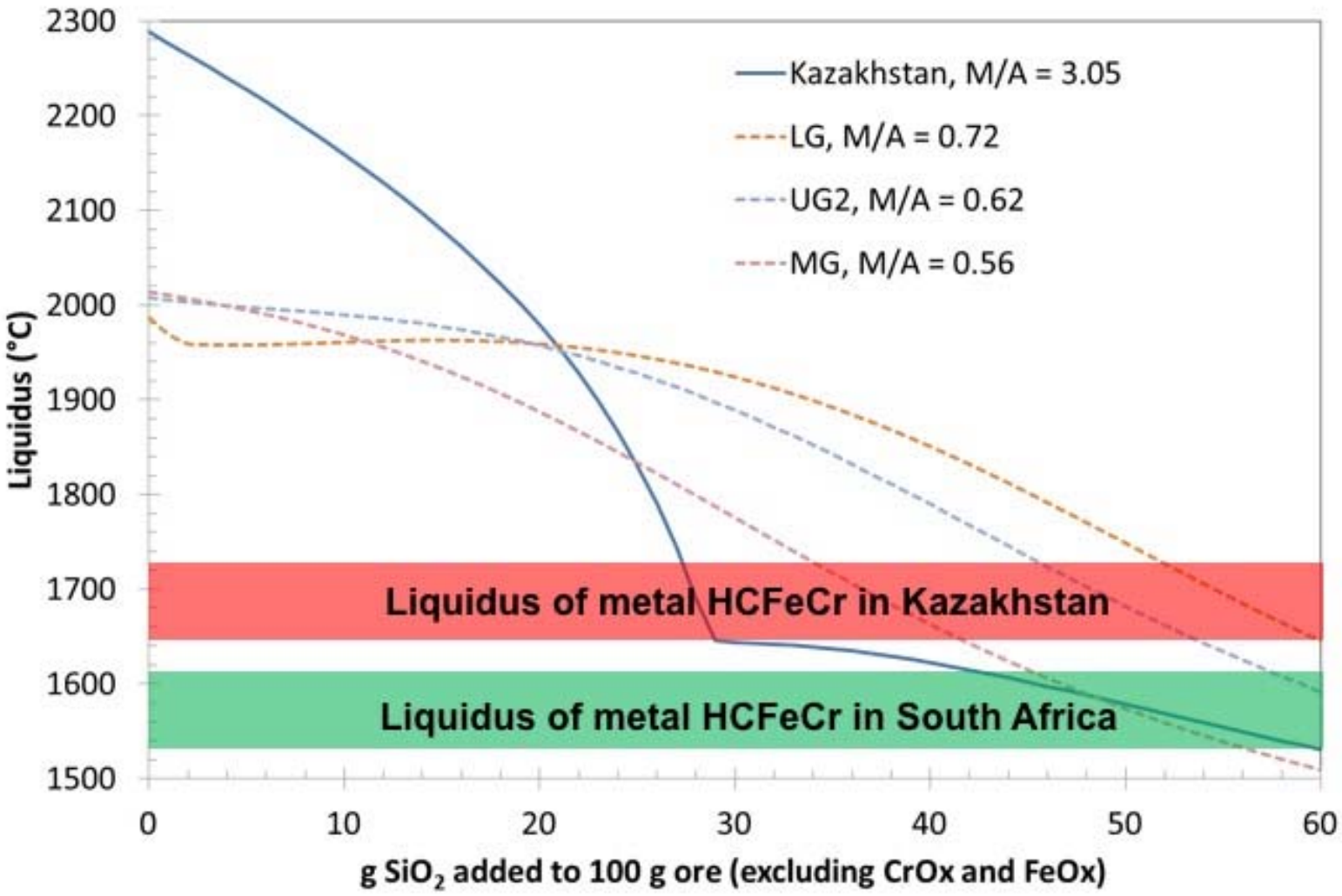

MINTEK

Slag viscosity (CaO as flux)

Add CaO to lower viscosity, but don't increase liquidus T too much

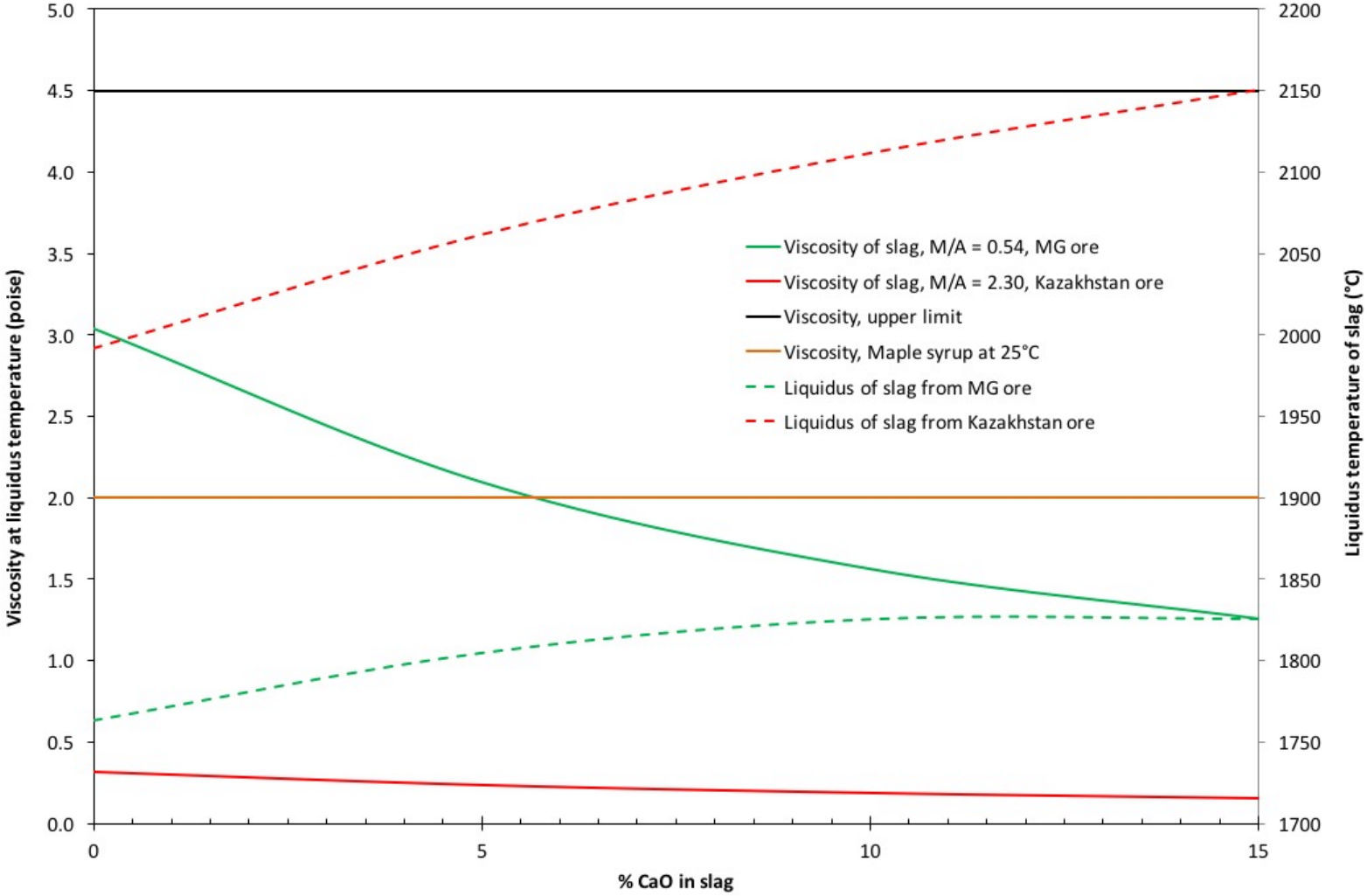

FactSage 7.0, FTOxid database

Conclusions

- The past three decades have seen the introduction of an effective new smelting technology for ferro-alloys, as well as increasingly capable process simulation tools

- Flowsheet simulators based on chemical thermodynamic databases running on personal computers were introduced to the pyrometallurgical industry in the 1980s and have become rather ubiquitous since then

- There is a place for equilibrium calculations involving non-ideal slag and alloy solutions, as well as for empirical models that can be used in an operating plant environment

MINTEK

Mintek's DC furnaces

http://www.mintek.co.za/Pyromet/